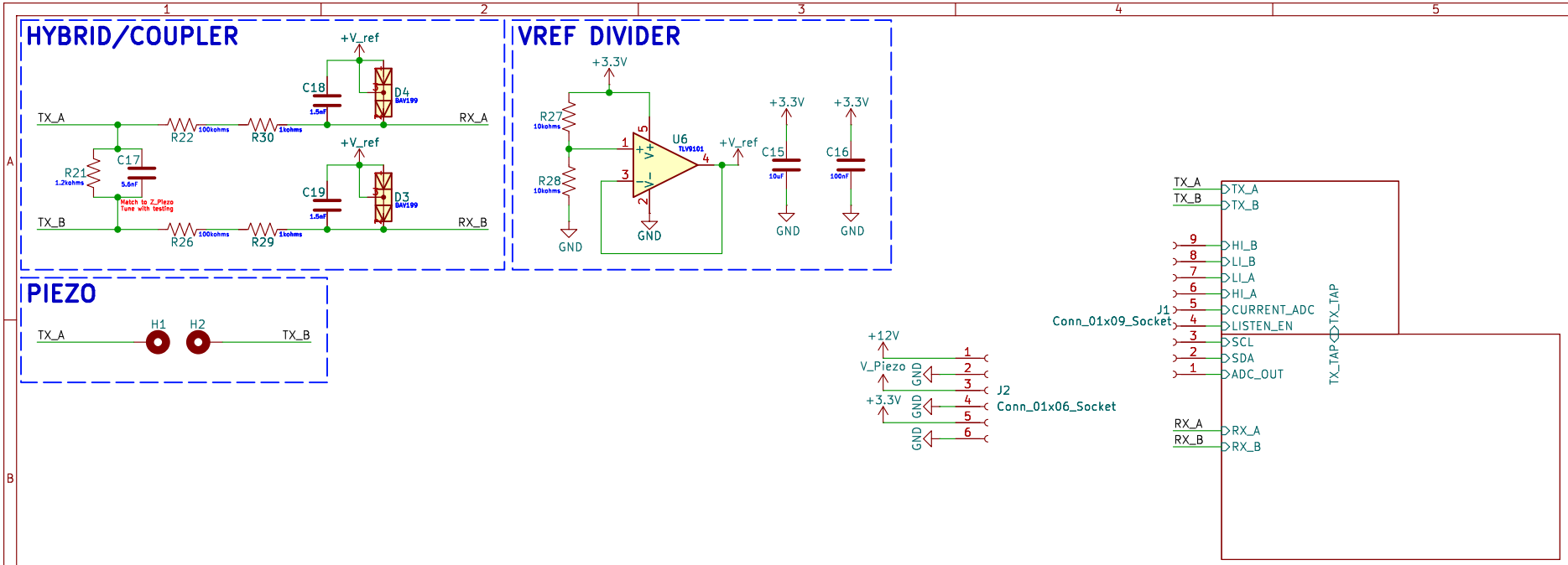

Sheet: /
File: COMMs.kicad_sch

Title:

Size: A4	Date:	Rev:
KiCad E.D.A. 8.0.6		Id: 1/3

HALF H-BRIDGE (Leg A)

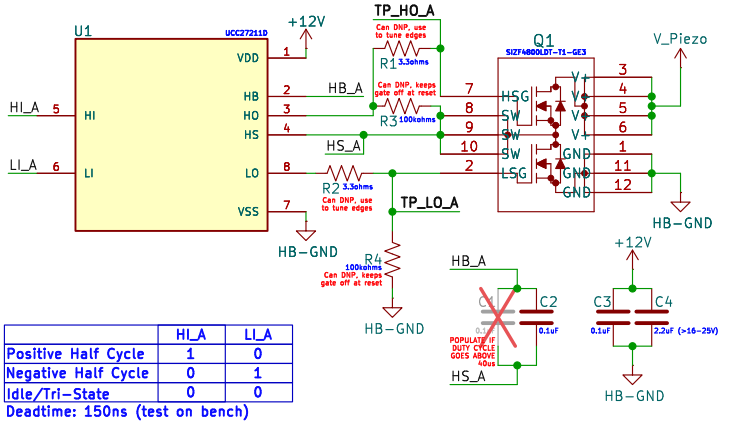

	HI_A	LI_A
Positive Half Cycle	1	0
Negative Half Cycle	0	1
Idle/Tri-State	0	0

Deadtime: 150ns (test on bench)

HALF H-BRIDGE (Leg B)

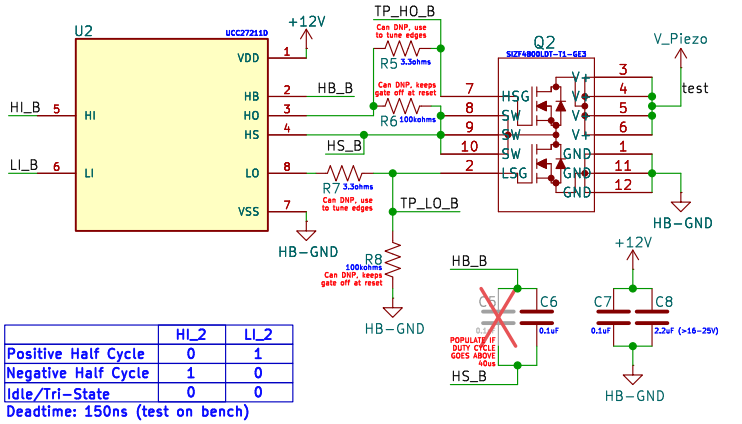

	HI_2	LI_2
Positive Half Cycle	0	1
Negative Half Cycle	1	0
Idle/Tri-State	0	0

Deadtime: 150ns (test on bench)

RC SNUBBER NETWORK

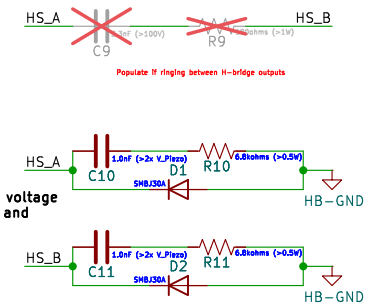

Damps voltage spikes and ringing

Tweak values based on ringing

CURRENT SENSE

Measures voltage across the shunt resistor and outputs a filtered, mid-biased signal proportional to current for ADC monitoring.

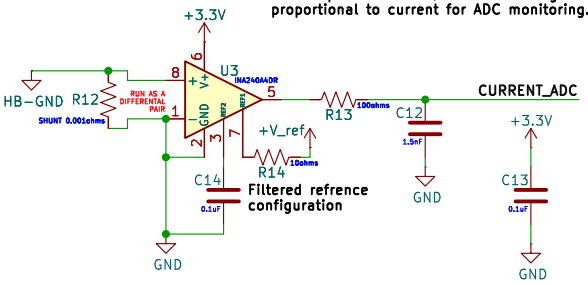

TX/BLANKING CONTROL SWITCH

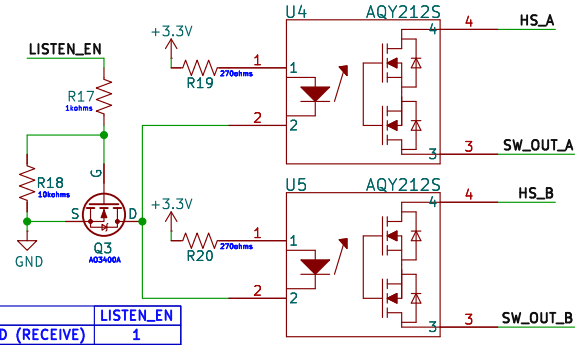

	LISTEN_EN
CLOSED (RECEIVE)	1
OPEN (BLANKING)	0

Assert > 1ms before TX
Hold through an 2-5ms after
wait >50-100µs before starting ADC

Physically disconnects TX drivers from the transducer during receive to prevent loading and enable half-duplex operation.

IMPEDANCE MATCHING

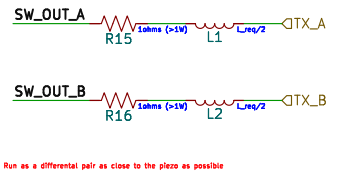

Impedance values to be filled in after testing

EXTERNAL CONNECTIONS

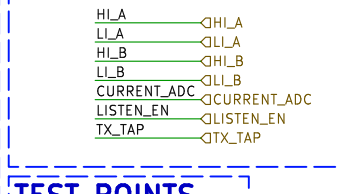

TX VOLTAGE TAP

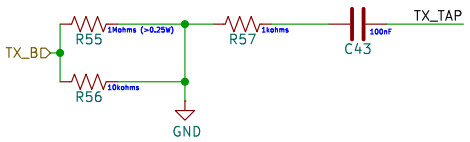

POWER FLAGS

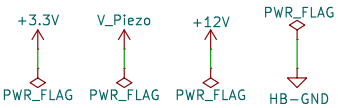

TEST POINTS

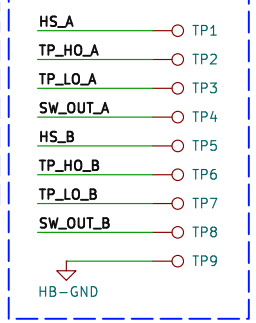

Sheet: /TX/
File: TX.kicad_sch

Title:

Size: A4	Date:	Rev:
KiCad E.D.A. 8.0.6		Id: 2/3

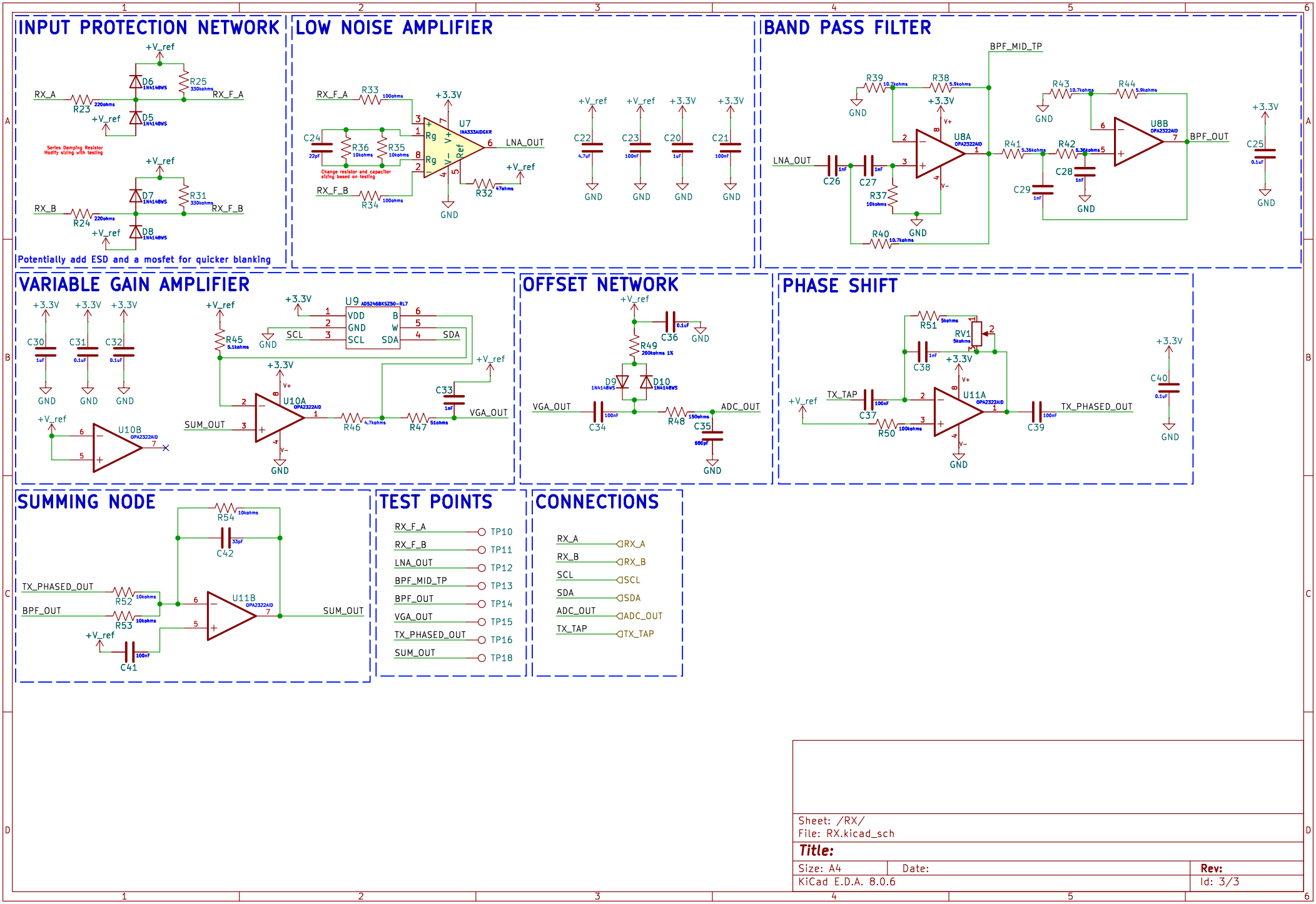

Sheet: /RX/
File: RX.kicad_sch

Title:

Size: A4	Date:	Rev:
KiCad E.D.A. 8.0.6		Id: 3/3